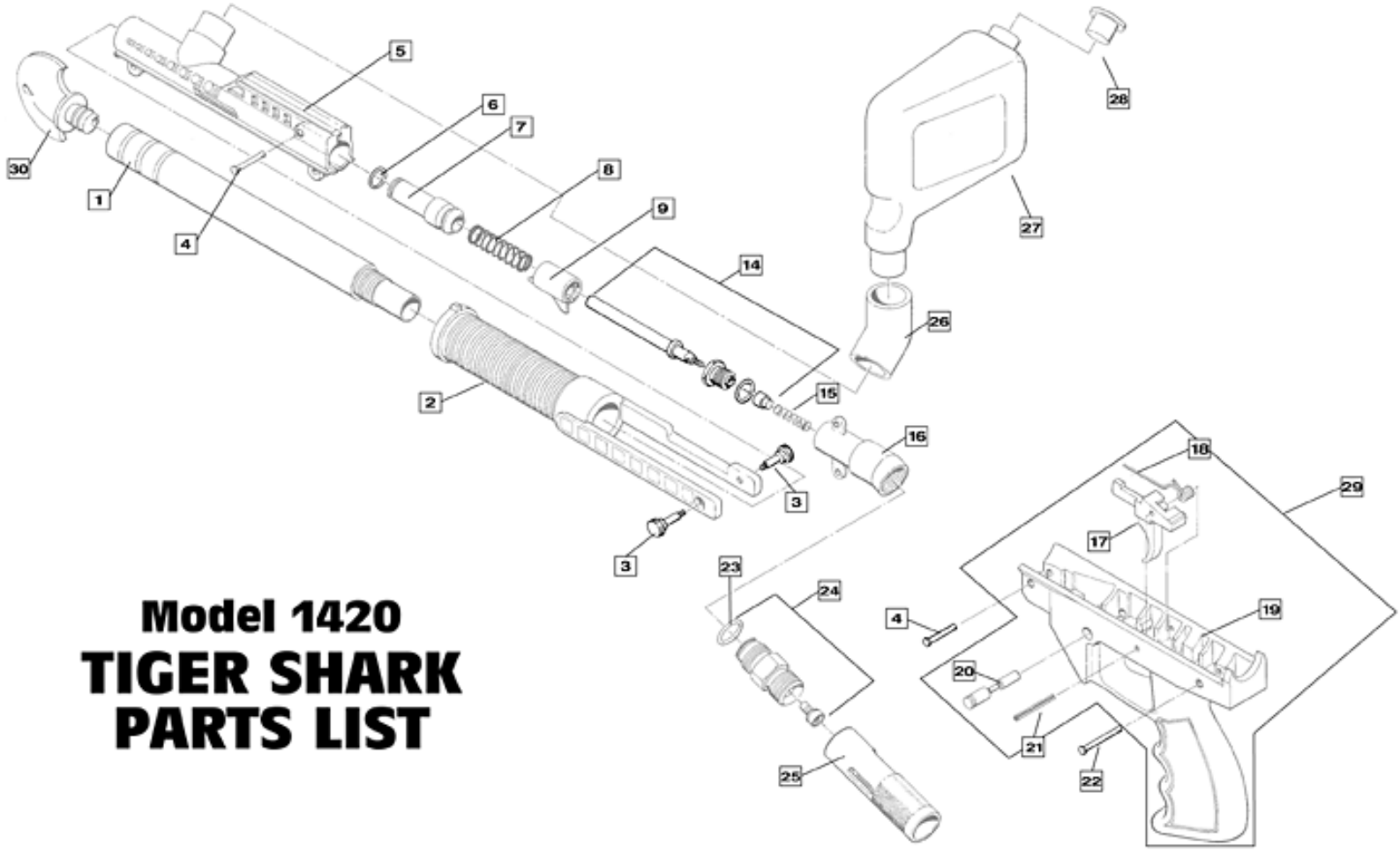


# Model 1420
# TIGER SHARK
# PARTS LIST

Manuals Provided by: http://www.mcarterbrown.com